What is a Construct?

- A conceptual term used to describe a phenomenon of theoretical interest .

What is a measure?

- Indicator (Diamantopolous & Winklofer, 2001)
- Item (Law, Wong & Mobley, 1998)
- Score gather through self-report, interview, observation (Edwards & Bagozzi, 2000)

Four issues of Construct
(Edwards & Bagozzi, 2000)

1. Construct must have an independent existence even if not conceptualized & incorporated in a study;

2. The relationship between the phenomenon named by the construct and its measures;

Four issues

3. The phenomenon described by the construct may or may not be directly observable.

4. There are differences in the way constructs assign meaning to theoretical phenomenon.

Types of Construct

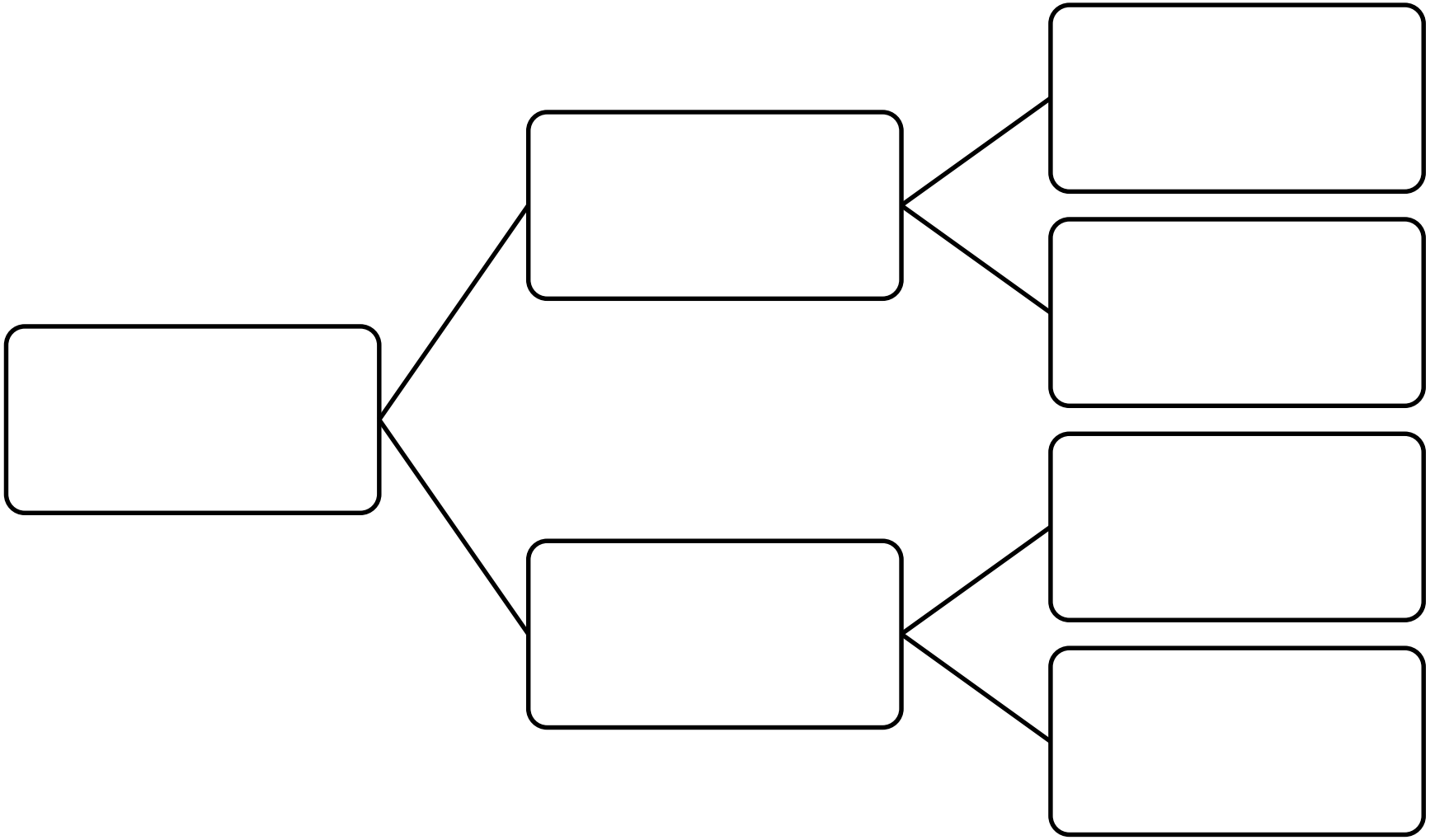

Unidimensionality (Hattie, 1985)

- Unidimensional construct , i.e., a construct with a unitary concept (Boudreau, et al., 20010).
- The existence of a single trait or construct underlying a single set of measures.
- Analysis of first-order construct (Gefen et al., 2000; Gefen 2004).

Figure 3: Unidimensional Construct[1]

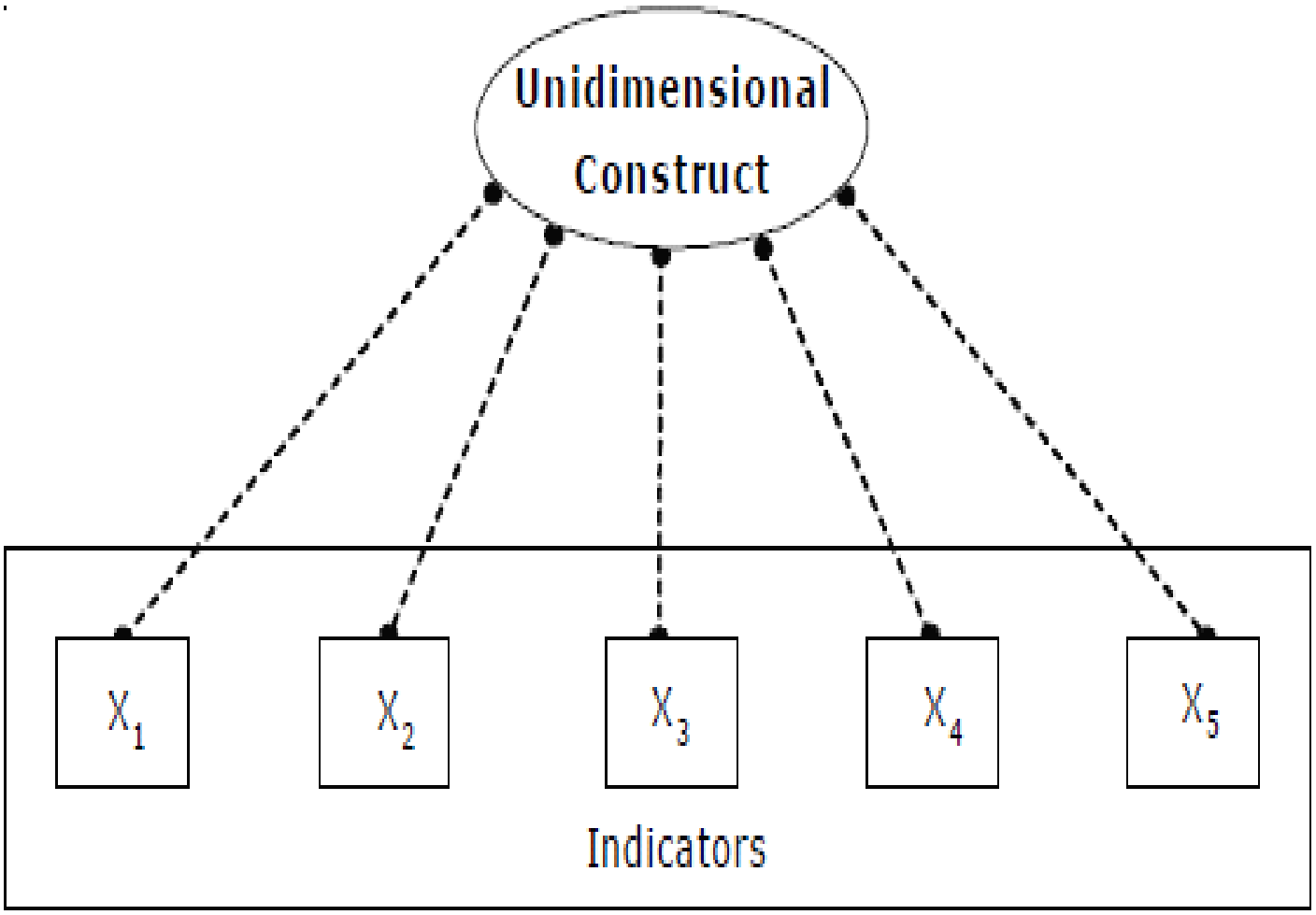

Multidimensional Construct

- Refers to several distinct but related dimenisons treated as a single theoretical concept (Edwards, 2001).
- Each individual dimension represent a unique content domain of the construct.
- is measured with a set of respective indicators (Polite, Roberts, & Thatcher, 2012).
- A higher-order construct that underlies its dimensions (Law et al., 1998)

Figure 4: Multi-dimensional Construct[2]

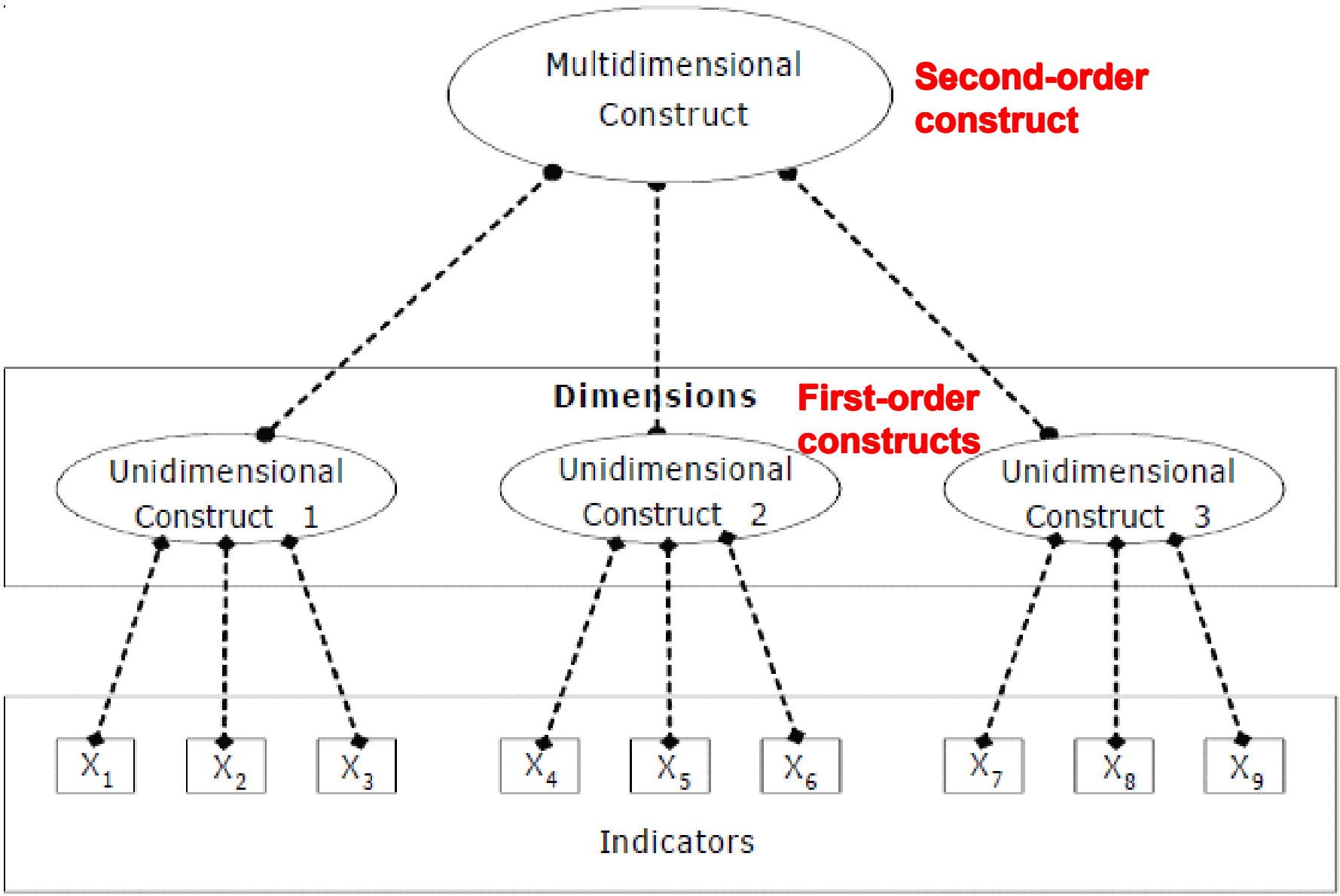

Reflective Unidimensional Construct

- The construct is viewed as the cause and the measures/indicators/items are its effects (manifestation)

Figure 1: A Reflective Construct

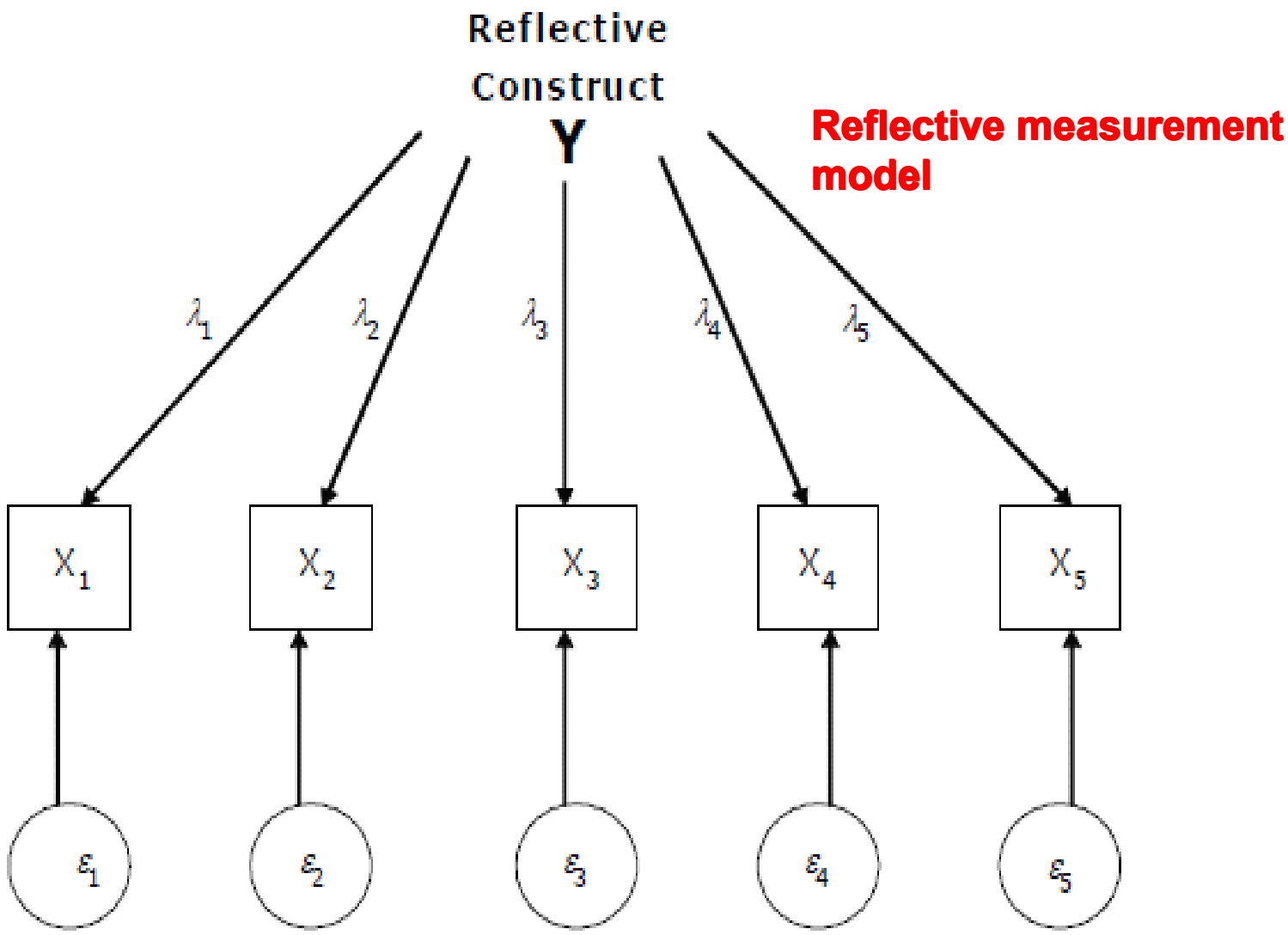

Mathematically, a reflective construct may be represented as:

$$X_i = \lambda_i Y + \varepsilon_i \qquad \ldots (1)$$

where X_i is the ith indicator

Y is the reflective construct which affects X_i

λ_i is coefficient which measures the expected effect of Y on the ith indicator; and

ε_i is the measurement error for the ith term

Thus, in the case of a reflective construct, each indicator is separately associated with the construct mathematically.

Figure 2: A Formative Construct

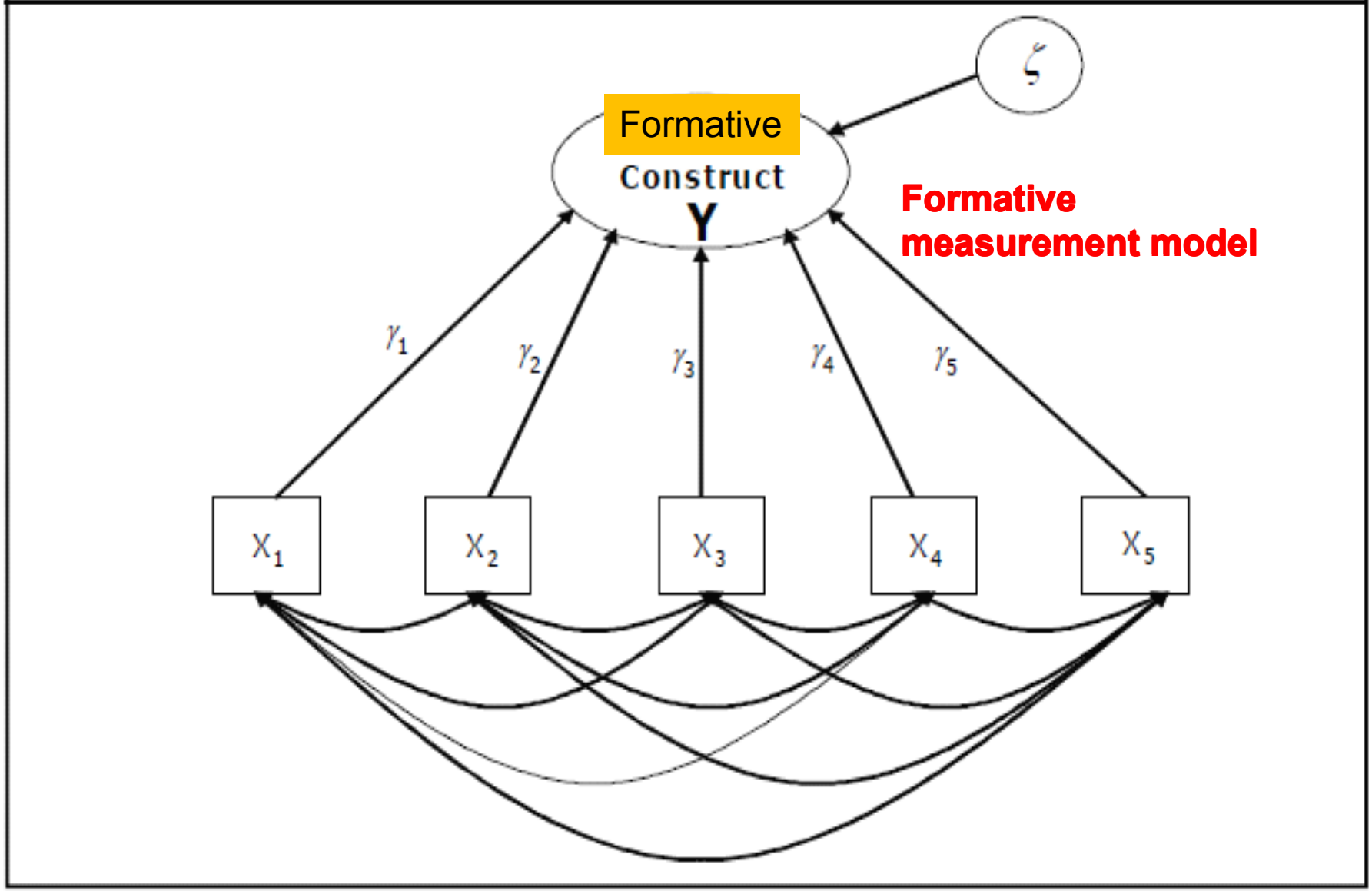

Conversely, a formative construct may be represented mathematically according to Diamantopolous and Winklhofer (2001) as:

$$Y = \gamma_1 X_1 + \gamma_2 X2 + \ldots\ldots\ldots\ldots\ldots + \gamma_n X_n + \zeta \qquad \ldots(2)$$

where X = all X terms are the indicators

Y = the formative construct

γ = all γ terms are the weights for the respective indicators, and

ζ = the common error term.

How to conceptualize the measurement of multidimensional construct?

- A single set of terms for researchers to use when describing multidimensional constructs.
- A theoretical issues related to the use of multidimensional constructs.
- Many studies do not clearly explain the theoretical reasons for choosing the specific multidimensional form of the construct.
- Provide a foundation for theorizing about and evaluating multidimensional constructs.

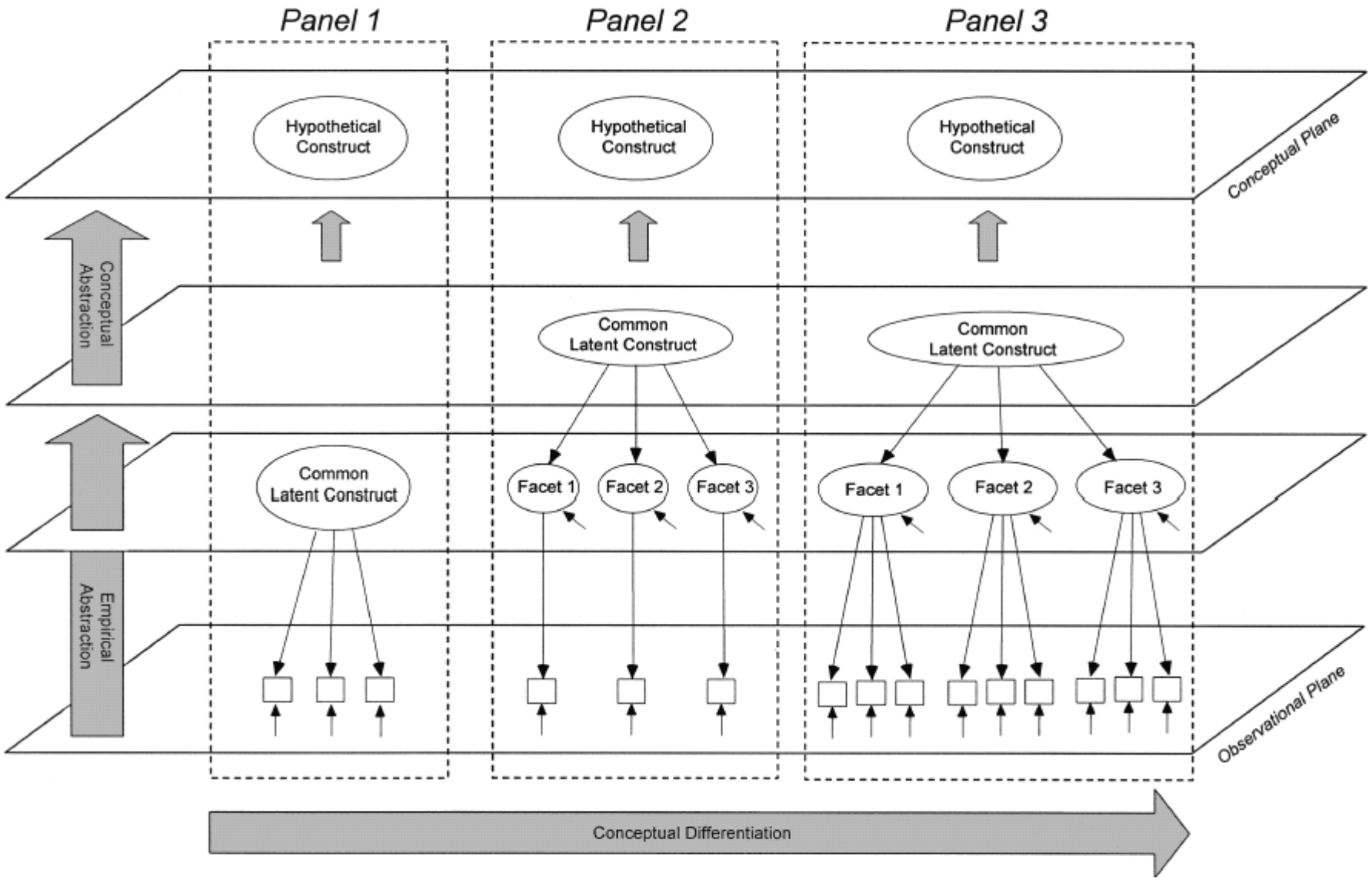

Figure 2. Reflective-indicator measurement models.

Source: MacKenzie, Podsakoff, & Jarvis (2005, pp.714)

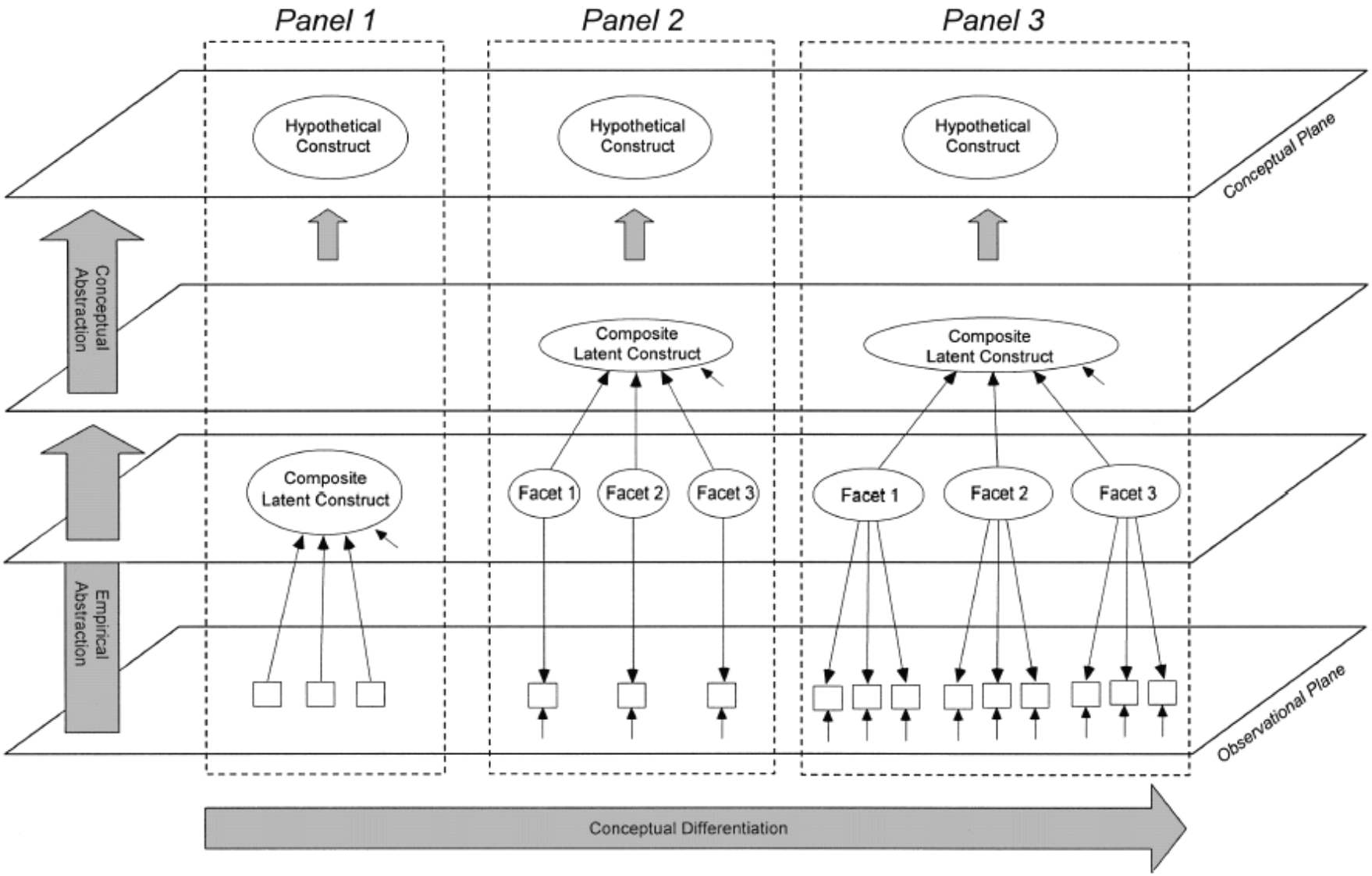

Figure 3. Formative- and mixed-indicator measurement models.

Source: MazKenzie, Podsakoff, & Jarvis (2005, pp.715)

- Failure to properly specify a multidimesional construct may lead to poor model fit or biased parameter estimates in otherwise ‘good-fitting’ model when the construct is tested in a nomological network (Diamanatopoulos & Winklhofer, 2001; Jarvis, et al., 2003; Petter, et al., 2007).

Higher-order Construct

Figure 5: Different Forms of First and Second Order Constructs

5a: First Order Reflective, Second Order Reflective

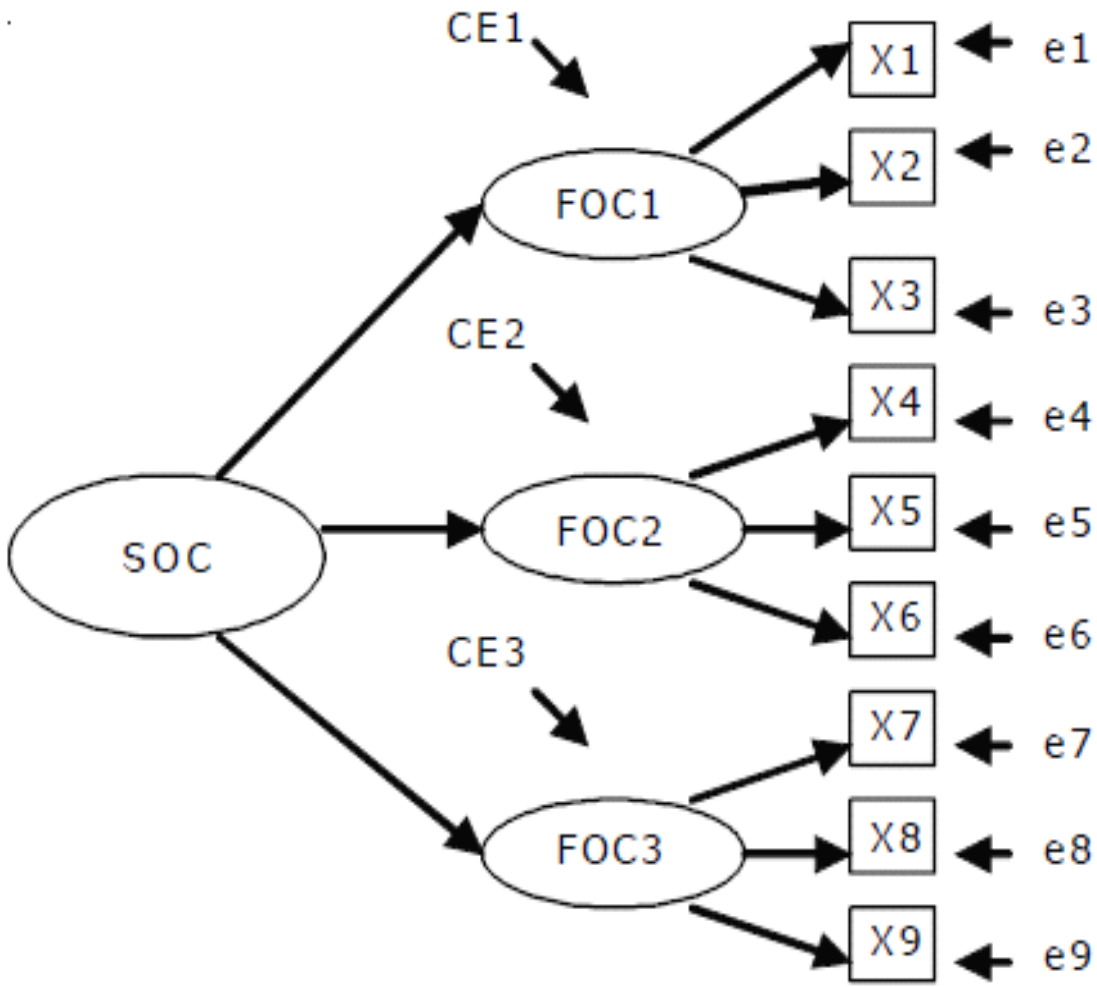

5b: First Order Reflective, Second Order Formative

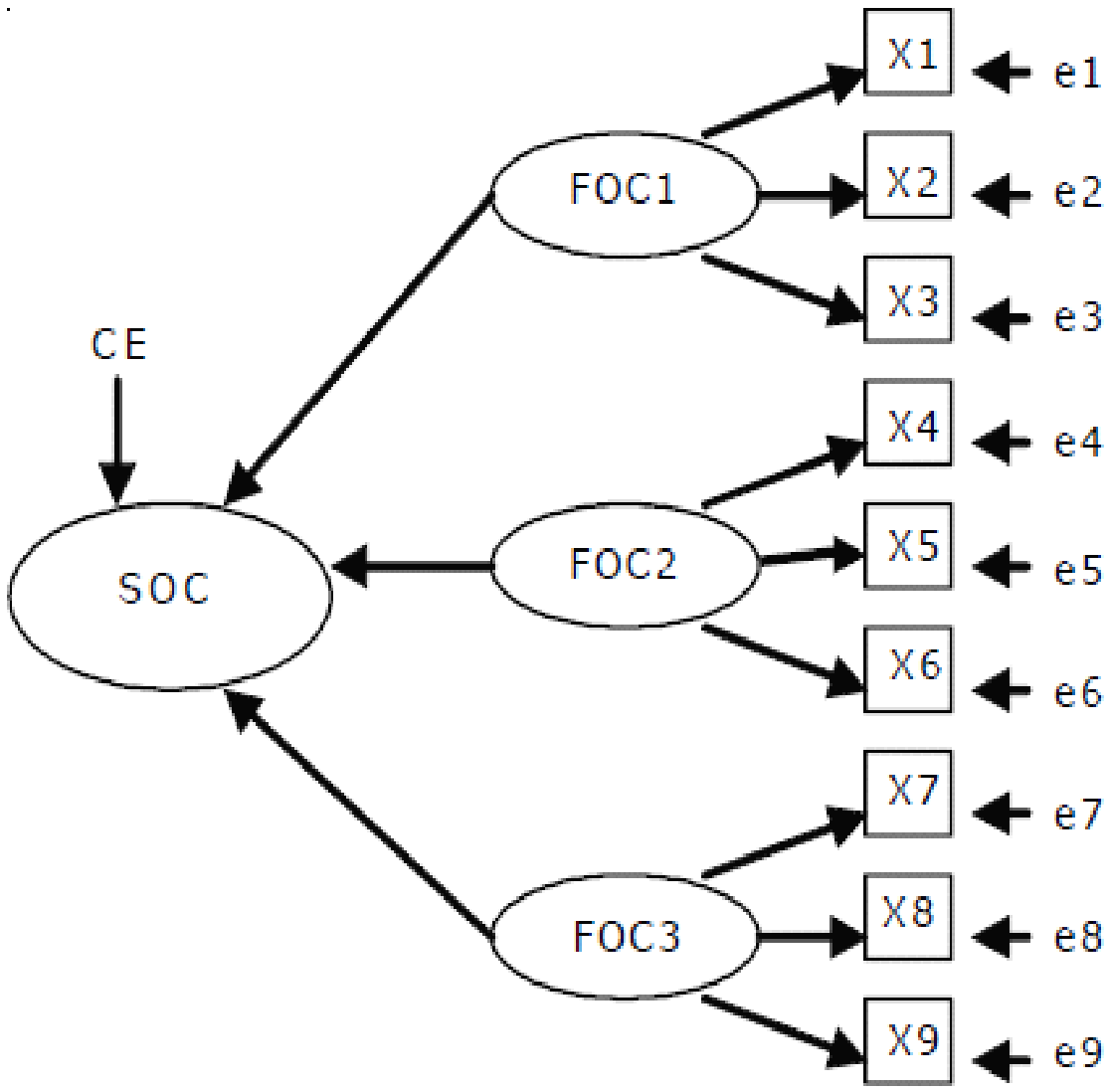

Figure 5: Different Forms of First and Second Order Constructs

5c: First Order Formative, Second Order Reflective *(...contd)*

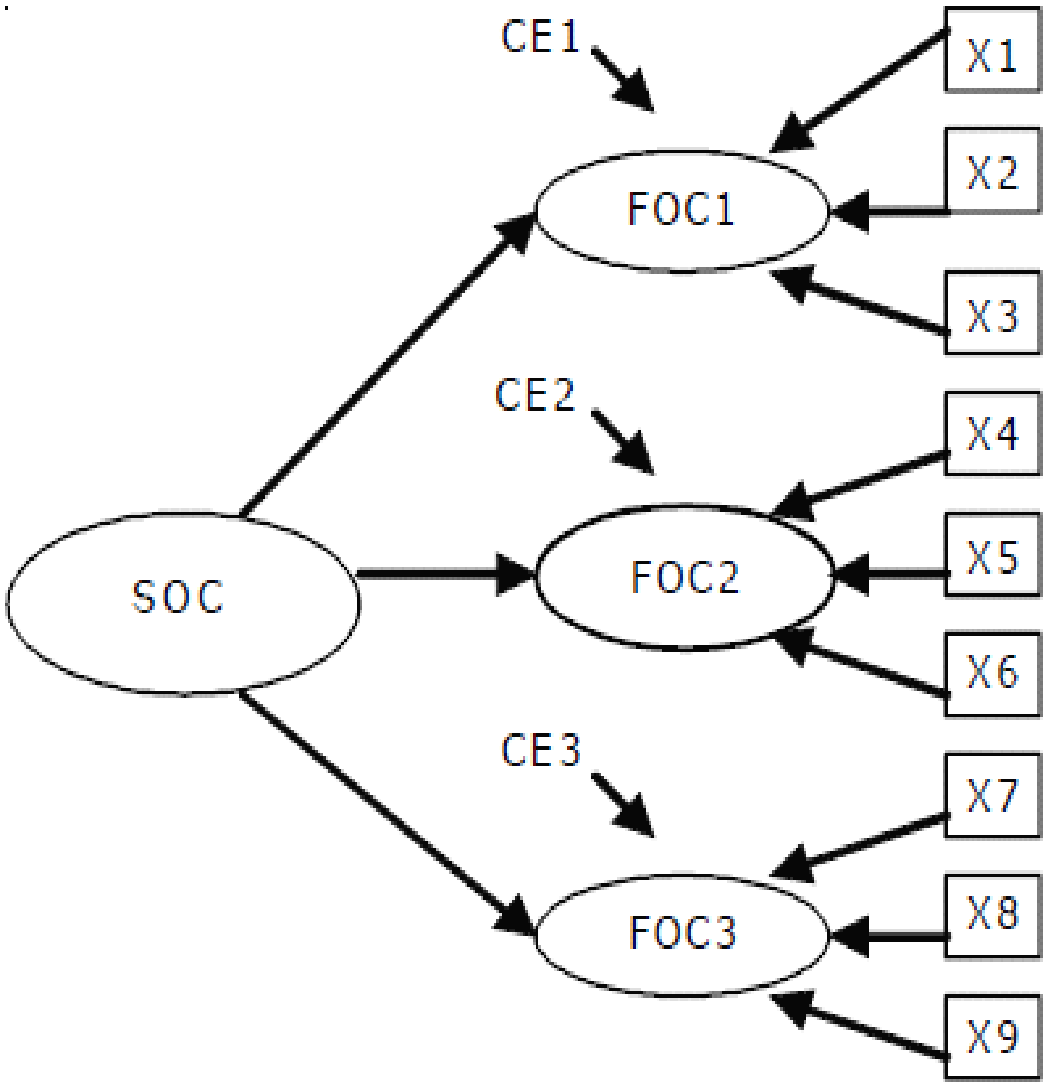

5d: First Order Formative, Second Order Formative

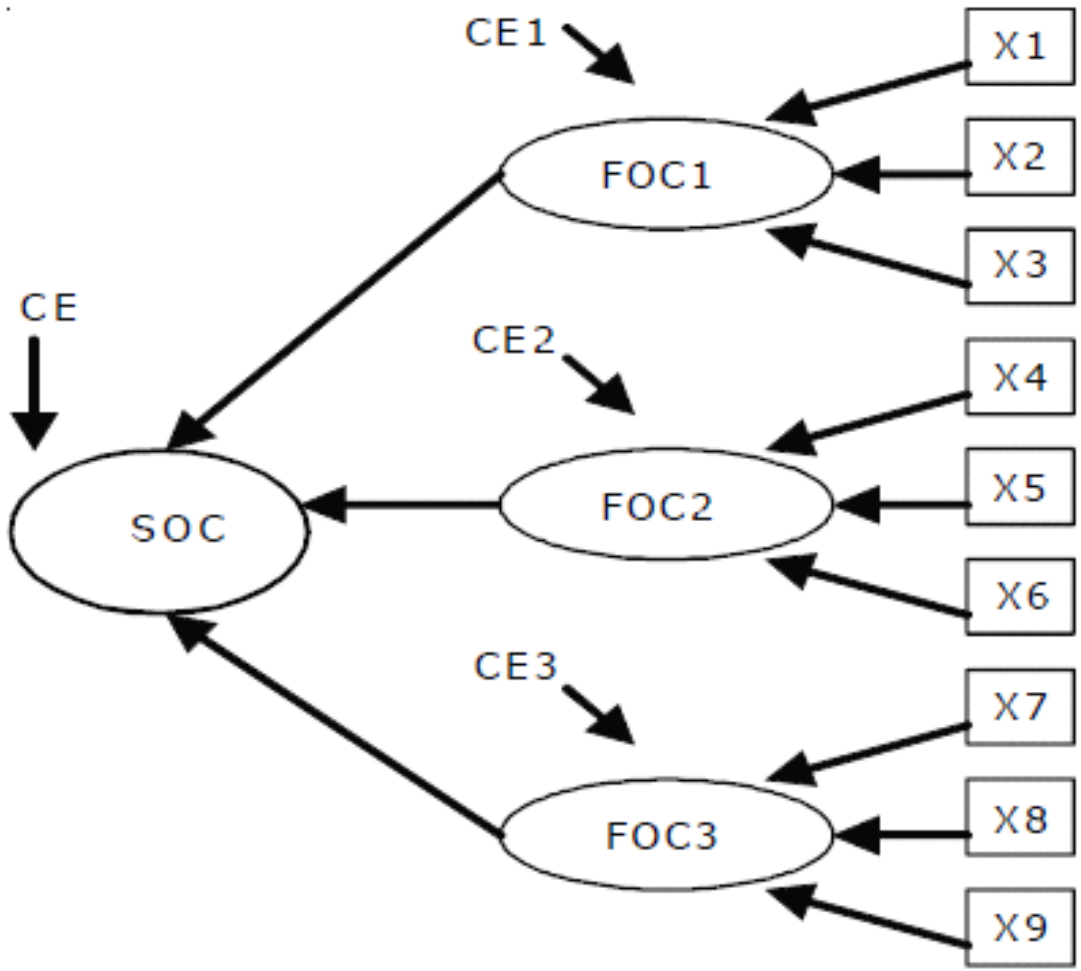

Note: 'X's are the Measured Variables, 'e's are the Error Terms associated with Measured Variables, FOC is First Order Construct, SOC is Second Order Construct, 'CE's are the Construct Errors.

References for Higher order model

Jarvis et al. (2003)

Markenzie et al. (2005)

Hair et al. (2011, 2013)

Becker et al. (2013)

Reflective measurement model

1. The direction of causality flows from the construct to the measures; construct explains variation in the measures.
2. The measures highly correlated because they reflect the same construct -> high level of internal consistency.
3. Equally reliable measures of construct (unidimensional) are interchangeable -> dropping measures should not alter the meaning of the construct.
4. Error is associated with the individual measures rather than the construct as a whole (refer Figure 1 & Figure 2) -> identify weaker items and suggest for improvement.

Therefore,

- a summated score in place of a construct will result inconsistent structural estimates of the relationships between/among the constructs.

Formative measurement model

- The measures jointly influence the construct
- -> the meaning of construct is fully explained by the measures
- -> dropping items (based on or item-to-total correlation) will alter the conceptual meaning of the construct.
- -> the measures do not assumed to be correlated – multicollinearity must be avoid.
- -> internal consistency reliability is not taken into consideration
- -> nomological validity*

*include the items in questionnaire

Reflective vs. Formative Construct

Reflective Construct	Formative Construct
1. Construct is reflected in the indicators	1. Construct is a composite of indicators
2. Account for observed variances in the outer model – error is assess at the item level.	2. Minimize residuals in the structural relationship-error is assessed at the construct level.
3. Identification achieved with three effect indicators	3. Identification is given only if the construct is embedded into a larger model
4. Important aspects: ▪ Internal consistency or reliability ▪ Positive correlation between measures ▪ Unidimensionality allows for	4. Important aspects: ▪ Indicators examine different dimensions ▪ Multicollinearity is a problem ▪ Removing an indicator affects

Measurement Model Misspecification

A formative construct is measured as reflective or a reflective construct is measured as formative construct.

A Correctly Specified Model

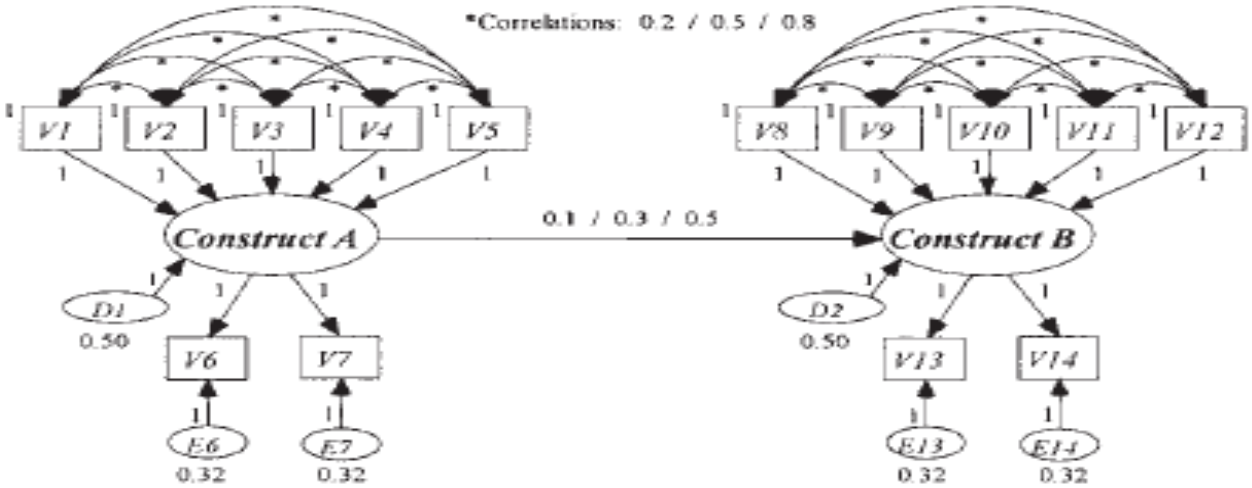

B Exogenous Construct Misspecified

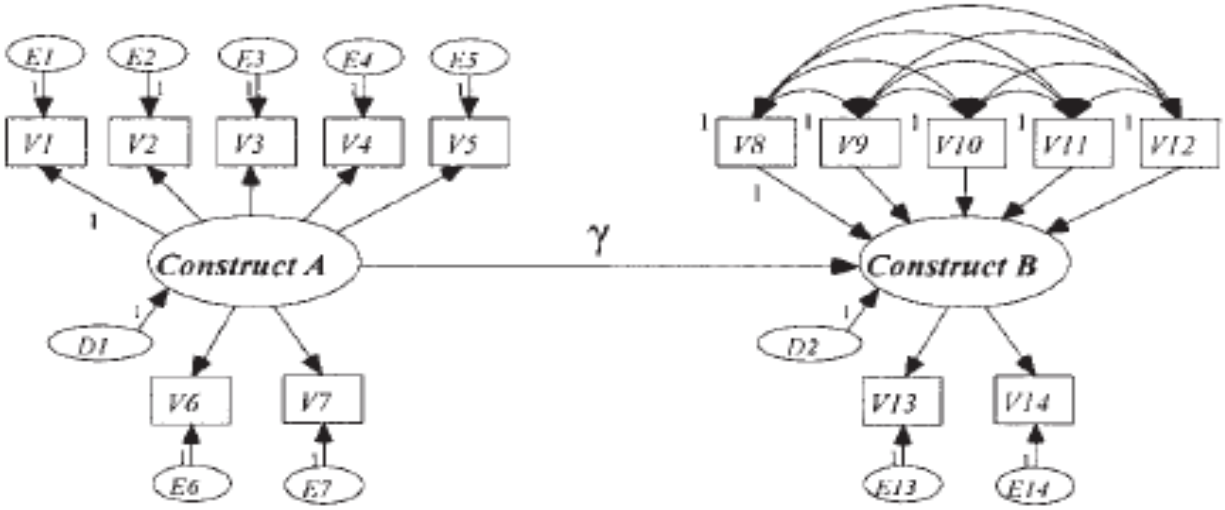

C Endogenous Construct Misspecified

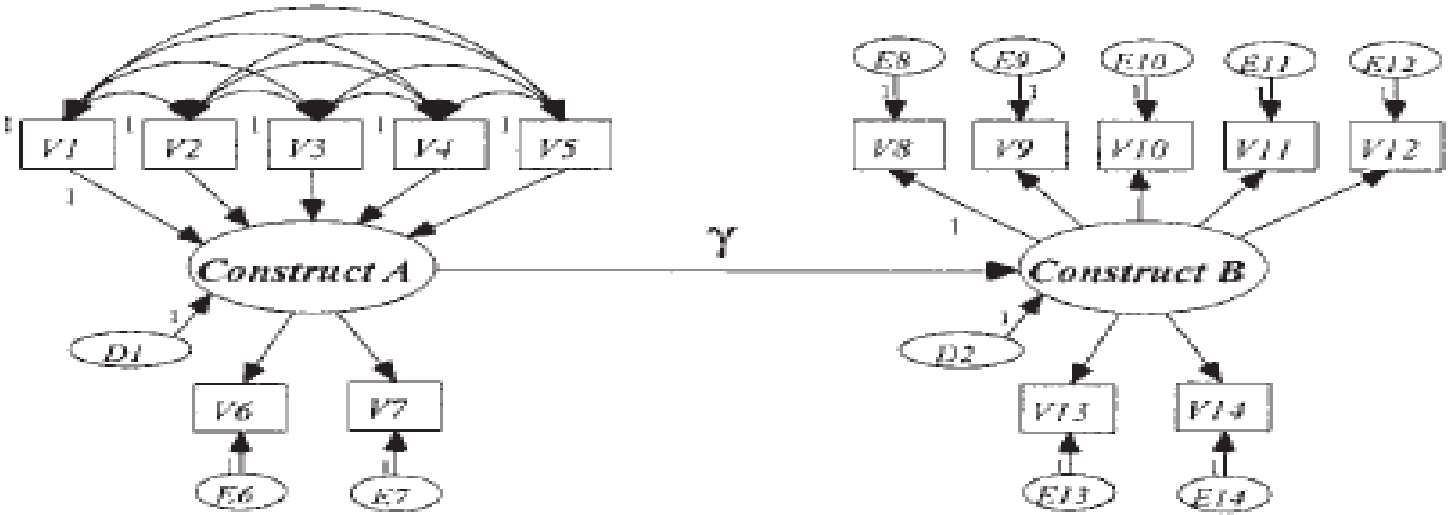

D Both Constructs Misspecified

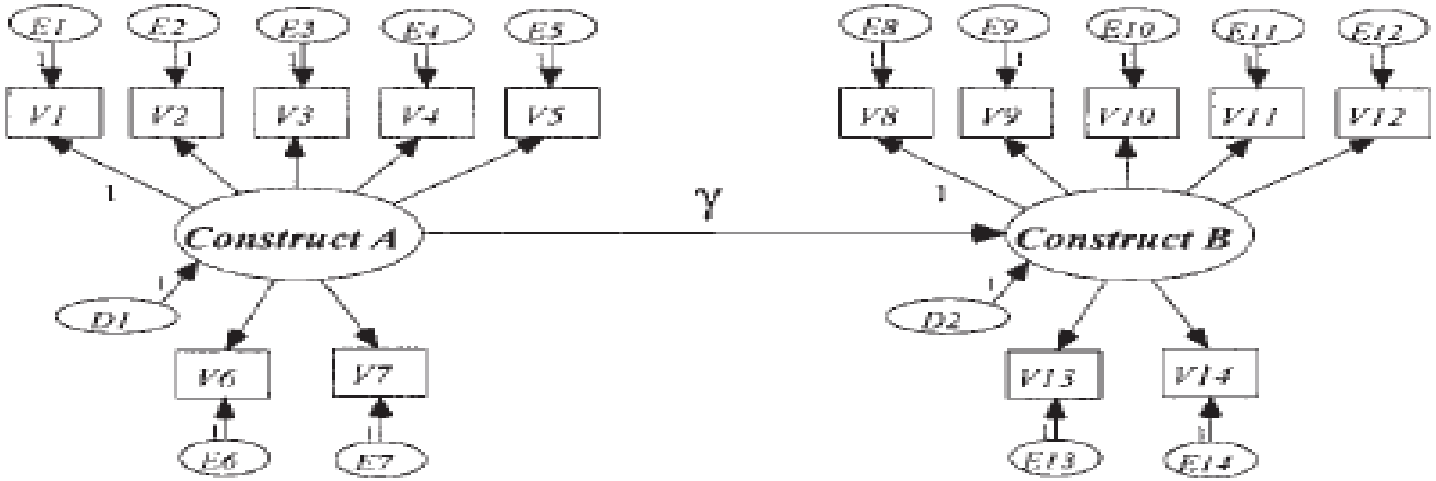

Measurement Model Misspecification

- Psychology (Bollen & Lennox, 1991)
- Marketing (Diamantopolous & winklhofer, 2001; Jarvis et al., 2003)
- Organizational behaviour (Mackenzie et al., 2001, 2011)

Questions for distinguishing between Reflective- and Formative measurement model

1. Do the measures define characteristics of the construct or vice-versa?
2. Do the measures appear to be conceptually interchangeable?
3. Do the measures expected to covary with each other?
4. Do the measures are expected to have the same antecedent and/or consequences?

- How do we know whether reflective or formative measurement model?

Theoretical consideration

- Nature of construct;
- Direction of causality between items & latent variable; and
- Characteristics of items used to measure the construct.

Empirical consideration

- Item intercorrelation;
- Item relationships with construct antecedents & consequences; and
- Measurement error & collinearity.

TABLE 1

DIFFERENCES BETWEEN FIRST-ORDER FORMATIVE AND REFLECTIVE CONSTRUCTS

Reflective First-order Constructs	Formative First-order Constructs
The causality direction is from the constructs to the measures.	The causality direction is from the measures to the construct.
Measures are effects of the underlying construct.	Measures are causes of the construct.
The latent variable represents the common shared variance by all measures reflecting the construct.	The indicators determine the latent variable, which receives its meaning from the former.
A change in the latent variable causes variation in all measures simultaneously.	The indicators are distinctive causes, which are not interchangeable, as each indicator captures a specific aspect of the construct's domain; omitting one indicator potentially alters the nature of the construct.
Measurement errors are assumed to be independent.	Formative indicators' measurement errors must be estimated.
All measures in the measurement model must be positively correlated.	The measures do not need to be correlated (positively or not).

Note.—Adapted from "Advancing Formative Measurement Models" by Diamantopoulos, A., Rieffler, P., & Roth, K. P. (2008) *Journal of Business Research*, 61(12), 1203-1218.

Measurement Model Misspecification

For example, another construct that probably should be modeled as a composite latent construct is transformational leadership. This construct is often conceptualized as being a function of charisma, idealized influence, inspirational leadership, intellectual stimulation, and individualized consideration (cf. Bass, 1985, 1998). In our view, these forms of leader behavior are conceptually distinct, likely to have different antecedents and/or consequences, and are not interchangeable. Indeed, it is not difficult to imagine a leader who is able to demonstrate consideration to followers (e.g., exhibit individualized consideration) but is not able to get them to question the appropriateness of critical assumptions they have about their work (e.g., exhibit intellectual stimulation) or able to display a sense of power and confidence (e.g., exhibit idealized influence). Thus, even though this construct has consistently been modeled in the literature as having reflective indicators (cf. Bycio, Hackett, & Allen, 1995; Geyer & Steyrer, 1998; Tracey & Hinkin, 1998), Bass's (1985) transformational leadership construct should be modeled as having formative indicators, probably as shown in Panel 3 of Figure 3. The same can be said for Podsakoff, MacKenzie, Moorman, and Fetter's (1990) slightly different conceptualization of transformational leadership.

(Mackenzie et al., 2005, pp.716)

If measurement model misspecified, then…

- …threaten the statistical conclusion validity of a study's findings
- …cause Type 1 and/or Type 2 errors of inference in hypothesis testing
- …bias structural parameter estimates.
- Researchers can not easily determine whether variation in results across studies emerge due to model specification, sampling characteristics or methodological differences.

Viewing from mathematical perspective

$$Y = \beta X + e \qquad ...(3)$$

where Y is the Endogenous Construct,

X is the Exogenous Construct,

β is the path Coefficient, and

e is the Error Term.

Given the relationship in equation (3), the variance of Y, i.e., $V(Y)$ can be written as:

$$V(Y) = \beta^2 V(X) + V(e) \qquad ...(4)$$

where $V(X)$ is the Variance of X, and

$V(e)$ is the Error Variance.

For the sake of simplicity, assume that $V(e) = 0$. Assuming $V(e) = 0$ in equation (4), we have:

$$V(Y) = \beta^2 V(X) \qquad ...(5)$$

$$V(Y)/V(X) = \beta^2 \qquad ...(6)$$

How to measure Reflective measurement model?

- Internal consistency (composite reliability)
- Indicator reliability
- Average Variance Extracted (AVE)
- Discriminant validity

How to measure Formative measurement model?

- Convergent analysis – redundancy analysis
- Collinearity –VIF/Tolerance
- Significance & relevance of the formative indicators (outer weight (relative contribution) & factor loadings (absolute important)